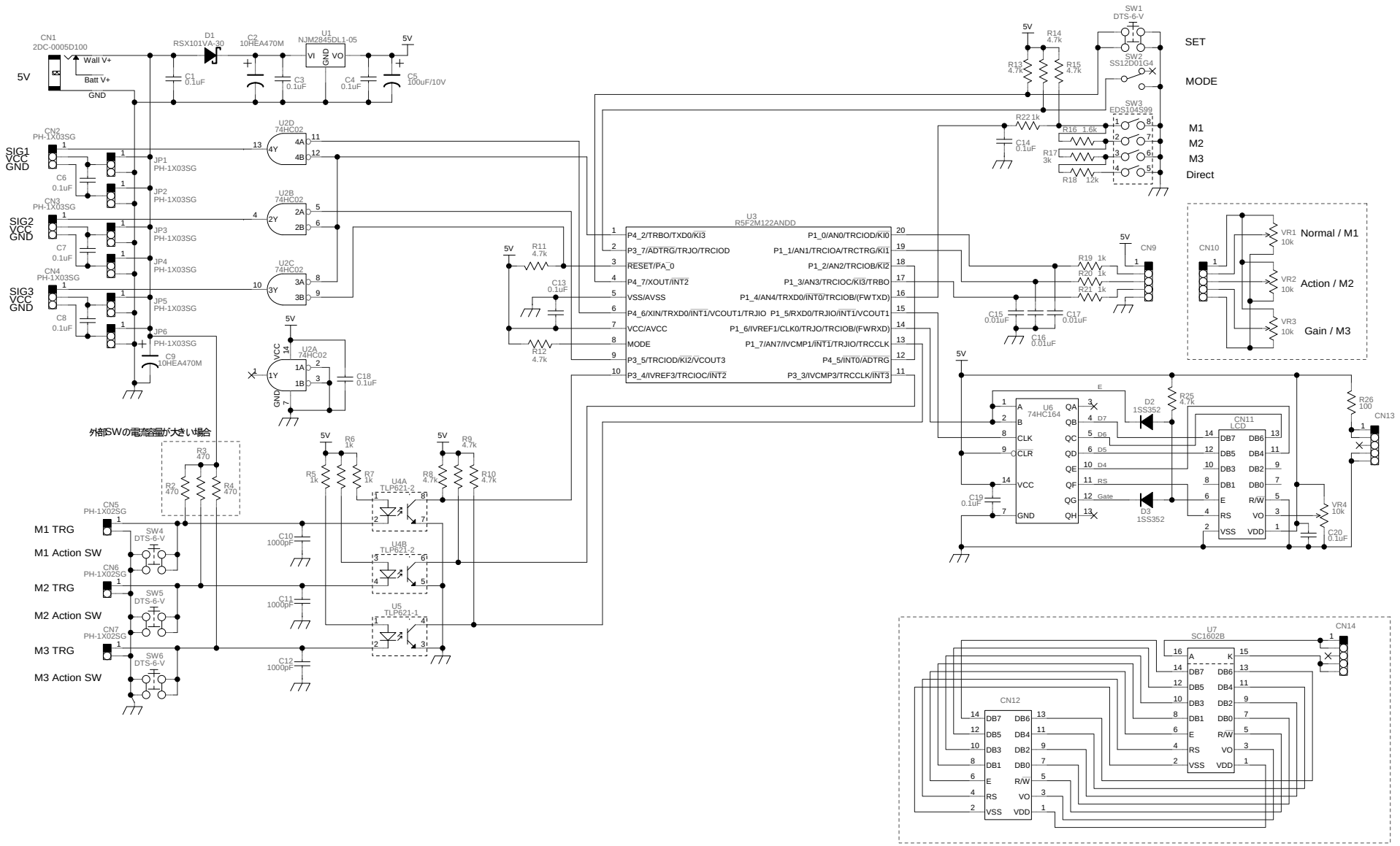
CN1
2DC-0005D100
Wall V+
Batt V+
GND
5V
D1
RSX101VA-30
C2
10HEA470M
U1
NJM2845DL1-05
VI
GND
VO
C1
0.1uF
C3
0.1uF
C4
0.1uF
C5
100uF/10V
CN2
PH-1X03SG
SIG1
VCC
GND
C6
0.1uF
CN3
PH-1X03SG
SIG2
VCC
GND
C7
0.1uF
CN4
PH-1X03SG
SIG3
VCC
GND
C8
0.1uF
JP1
PH-1X03SG
JP2
PH-1X03SG
JP3
PH-1X03SG
JP4
PH-1X03SG
JP5
PH-1X03SG
JP6
PH-1X03SG
C9
10HEA470M
U2D
74HC02
U2B
74HC02
U2C
74HC02
U2A
74HC02
C18
0.1uF
外部SWの電流容量が大きい場合
R3
470
R2
470
R4
470
CN5
PH-1X02SG
M1 TRG
M1 Action SW
SW4
DTS-6-V
CN6
PH-1X02SG
M2 TRG
M2 Action SW
SW5
DTS-6-V
CN7
PH-1X02SG
M3 TRG
M3 Action SW
SW6
DTS-6-V
R6
1k
R5
1k
R7
1k
U4A
TLP621-2
U4B
TLP621-2
U5
TLP621-1
R8
4.7k
R9
4.7k
R10
4.7k
C10
1000pF
C11
1000pF
C12
1000pF
R11
4.7k
C13
0.1uF
R12
4.7k
U3
R5F2M122ANDD
P4_2/TRBO/TXD0/KI3
P3_7/ADTRG/TRJO/TRCIOD
RESET/PA_0
P4_7/XOUT/INT2
VSS/AVSS
P4_6/XIN/TRXD0/INT1/VCOUT1/TRJIO
VCC/AVCC
MODE
P3_5/TRCIOD/KI2/VCOUT3
P3_4/IVREF3/TRCIOC/INT2
P1_0/AN0/TRCIOD/KI0
P1_1/AN1/TRCIOA/TRCTRG/KI1
P1_2/AN2/TRCIOB/KI2
P1_3/AN3/TRCIOC/KI3/TRBO
P1_4/AN4/TRXD0/INT0/TRCIOB/(FWTXD)
P1_5/RXD0/TRJIO/INT1/VCOUT1
P1_6/IVREF1/CLK0/TRJO/TRCIOB/(FWRXD)
P1_7/AN7/IVCMP1/INT1/TRJIO/TRCCLK
P4_5/INT0/ADTRG
P3_3/IVCMP3/TRCCLK/INT3
SW1
DTS-6-V
SET
SW2
SS12D01G4
MODE
R14
4.7k
R13
4.7k
R15
4.7k
SW3
EDS104S99
M1
M2
M3
Direct
R22 1k
C14
0.1uF
R16 1.6k
R17
3k
R18 12k
CN9
R19 1k
R20 1k
R21 1k
C15
0.01uF
C16
0.01uF
C17
0.01uF
CN10
VR1
10k
Normal / M1
VR2
10k
Action / M2
VR3
10k
Gain / M3
U6
74HC164
A
B
CLK
CLR
VCC
GND
QA
QB
QC
QD
QE
QF
QG
QH
C19
0.1uF
D2
1SS352
D3
1SS352
R25
4.7k
CN11
LCD
DB7
DB5
DB3
DB1
E
RS
VSS
DB6
DB4
DB2
DB0
R/W
VO
VDD
D7
D6
D5
D4
RS
Gate
R26
100
CN13
VR4
10k
C20
0.1uF
CN12
U7
SC1602B
CN14